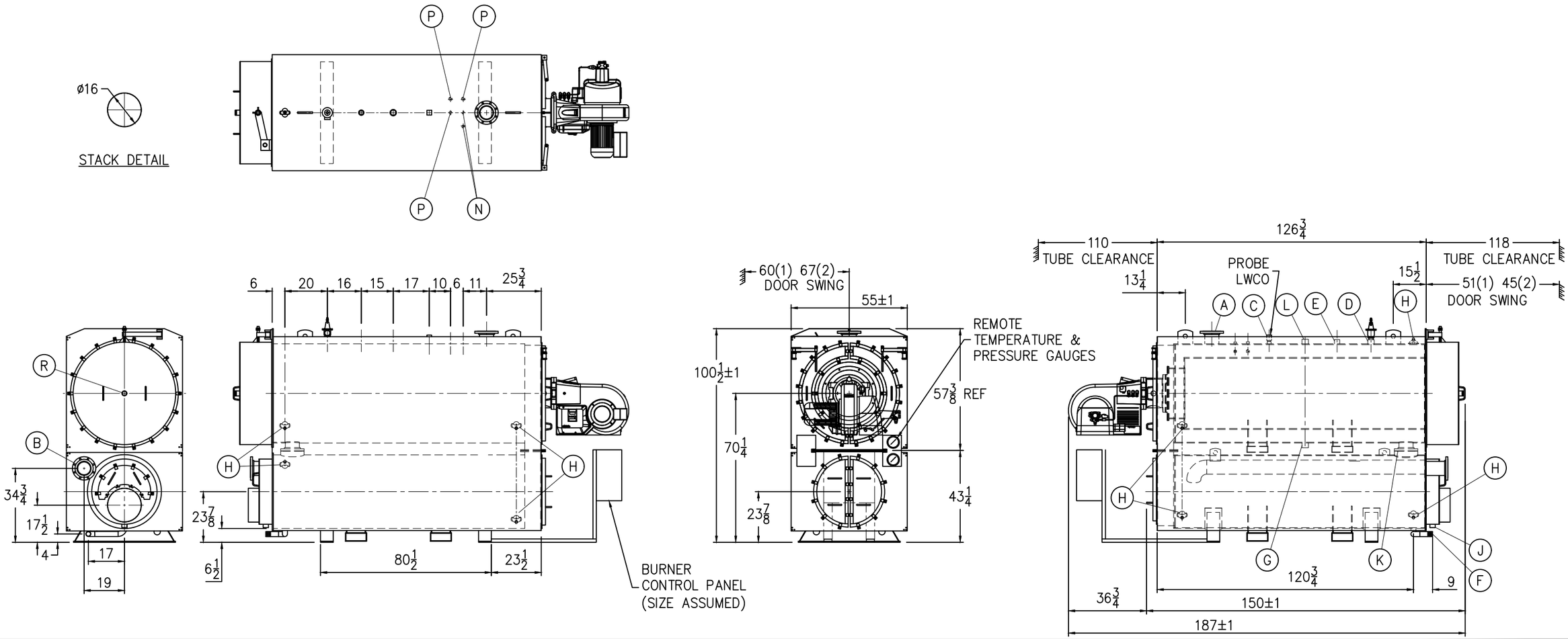

BOILER CONNECTIONS

A.(1)	WATER OUTLET	6" 150# FLANGE
B.(1)	WATER RETURN	6" 150# FLANGE
C.(1)	LWCO	1" NPT
D.(1)	SAFETY VALVE	2" NPT
E.(1)	SAFETY VALVE	1 1/2" NPT
F.(1)	BOILER DRAIN	2" NPT
G.(1)	WASHOUT	2" NPT
H.(8)	HANDHOLE	3" x 4"
J.(1)	CONDENSATE DRAIN	1 1/2" NPT
K.(1)	RISER/DOWNCOMER	6" 150# FLANGE
L.(1)	AUXILIARY/VENT	2" NPT
M.( )	LOW FIRE HOLD	
N.(2)	AQUASTAT	1/2" NPT
P.(3)	AQUASTAT	3/4" NPT
Q.( )	STACK TEMP	
R.(1)	SIGHT PORT	1" NPT

RATINGS & CAPACITIES

RATED INPUT	7000 MBH
GROSS OUTPUT	6650 MBH
DESIGN PRESSURE	125 PSI WATER
HEAT RELEASE: (FURNACE ONLY)	123,111 BTU/CuFt
HEATING SURFACE (ASME)	742 SqFt
FURNACE HEATING SURFACE	82.70 SqFt
FURNACE VOLUME	56.86 CuFt

WATER CAPACITY:
(FULL) 618 GAL @ 5,139 LBS

SHIPPING WEIGHT: 10,500 LBS

LTR	DATE	REVISION	BY

REPRESENTATIVE: X

PROJECT: X

NOTES

1. ALL CONTROLS MOUNTED AS PER SPECIFICATION SHEET.
2. SPECIFICATION SHEET TAKES PRIORITY OVER R & D SHEET.
3. BOILER DESIGN CODE ASME SECTION IV.
4. ALL DIMENSIONS ARE ±1/2" UNLESS OTHERWISE NOTED.
5. REAR DOOR SWING:
   (1) MIN SIDE, MAX REAR
   (2) MAX SIDE, MIN REAR

SUPERIOR BOILER

CHECKED BY	DATE
DRAWN BY X	DATE

BOILER MODEL: CH-7000-W125-WP-GP2

SCALE: 1/48

DRAWING No: X

THIS DRAWING IS THE PROPERTY OF SUPERIOR BOILER & SHALL NOT BE REPRODUCED IN PART OR IN WHOLE, & NONE OF ITS INFORMATION SHALL BE REVEALED WITHOUT PERMISSION OR TO THE DETRIMENT OF THE OWNER. IT MUST BE RETURNED UPON REQUEST.