ITEMS TO SHIP LOOSE

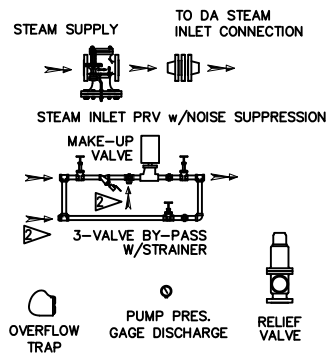

FIELD CONNECT
STEAM SECTION PRESSURE GAUGE
WATER IN-LET PRESSURE GAUGE

FIELD PLUMB
WATER IN-INLET PRESSURE GAUGE
(COMPONENTS NOT SUPPLIED)

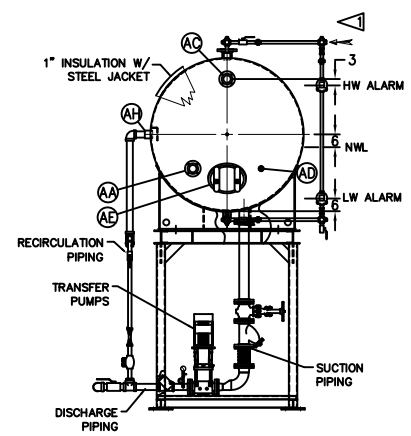

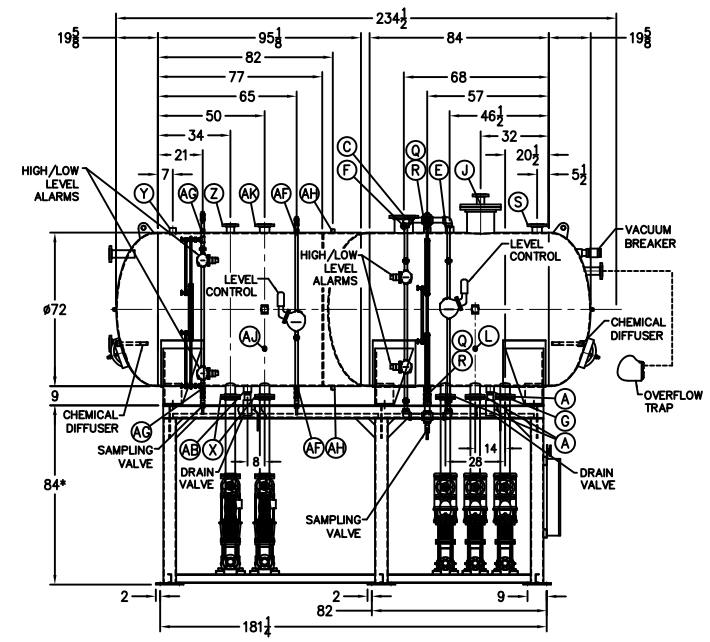

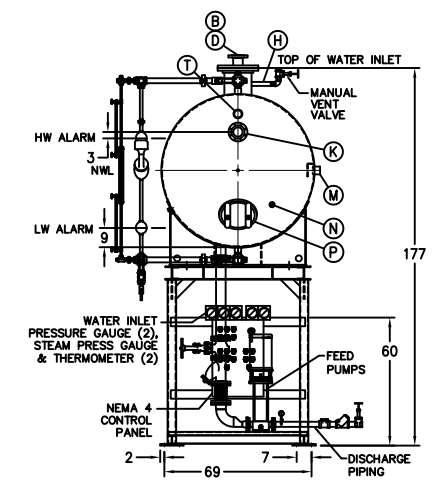

(D) LOW TEMP. RETURN (<180 °F)

(E) MEDIUM TEMP. RETURN (180–227 °F)

(F) HIGH TEMP. RETURN (>227 °F)

* STAND HEIGHT SUBJECT TO PUMP NPSH REQUIREMENTS
ALL COMPONENTS CONTINGENT UPON FINAL ENGINEERING.
PANEL SIZE MAY VARY DEPENDING ON JOB REQUIREMENTS

DEAERATOR TANK CONNECTIONS

A. (3) PUMP SUCTION	4 FLG IN.
B. (1) WATER INLET	3 FLG IN.
C. (1) STEAM INLET	8 FLG IN.
D. (1) LOW TEMP. RETURN	3 FLG IN.
E. (1) MED TEMP RETURN	2 1/2 IN.
F. (1) HI TEMP RETURN	2 IN.
G. (1) DRAIN	2 1/2 IN.
H. (1) MANUAL VENT	1 1/2 IN.
J. (1) VENT CONDENSOR	12 FLG IN.
K. (1) OVERFLOW	3 FLG IN.
L. (1) THERMOMETER	1 IN.
M. (1) RECIRCULATION	2 1/2 IN.
N. (1) CHEMICAL FEED	1 IN.
P. (1) MANWAY	12 X 16 IN.
Q. (2) LEVEL CONTROLS	2 IN.
R. (2) LEVEL ALARMS	2 IN.
S. (1) RELIEF VALVE	3" 300# FLG IN.
T. (1) VACUUM BREAKER	2 1/2 IN.

CONNECTIONS NPT UNLESS NOTED, FLANGES 150# UNLESS NOTED

SURGE TANK CONNECTIONS

X. (2) PUMP SUCTION	4 FLG IN.
Y. (1) WATER INLET	2 IN.
Z. (1) LOW PRESS. RETURN	3 FLG IN.
AA. (1) HI TEMP RETURN	3 FLG IN.
AB. (1) DRAIN	2 1/2 IN.
AC. (1) OVERFLOW	3 FLG IN.
AD. (1) CHEMICAL FEED	1 IN.
AE. (1) MANWAY	12 X 16 IN.
AF. (2) LEVEL CONTROLS	1 IN.
AG. (2) LEVEL ALARMS	1 IN.
AH. (1) RECIRCULATION	2 1/2 IN.
AJ. (1) THERMOMETER	1 IN.
AK. (1) VENT	4 FLG IN.
AH. (2) COND. VENT	1 IN.

CONNECTIONS NPT UNLESS NOTED, FLANGES 150# UNLESS NOTED

RATING & CAPACITIES

DA TYPE	SPRAY
CAPACITY	70,000 LBS/HR
DA SECTION CAPACITY	1,450 GALS.
DA STORAGE CAPACITY	10 MINUTES MIN.
DESIGN PRESSURE	50 PSIG STEAM
DESIGN TEMP.	400° F
DEAERATION	.005 CC/LITER
OPERATING PRESSURE	5 PSIG
SURGE SECTION CAPACITY	1,400 GALS.
SURGE STORAGE CAPACITY	10 MINUTES
DRY WEIGHT.	? LBS
OPERATING WEIGHT.	? LBS
FLOODED WEIGHT.	? LBS

THE ABOVE WEIGHTS DO NOT INCLUDE PUMPS, TRIM OR CONTROL PANEL.

SHIPPING WEIGHT

TANK (EMPTY)	?,??? LBS.
STAND/PUMPS	?,??? LBS.

LTR.	DATE	REVISIONS	BY
A	12-26-13	DESCRIPTION	XXX XXX

NOTES

1. ALL CONTROLS MOUNTED AS PER SPECIFICATION SHEET.
2. SPECIFICATION SHEET TAKES PRIORITY OVER DRAWING.
3. ALL DIMENSIONS ARE ±1" UNLESS OTHERWISE NOTED.
4. DA TANK DESIGN CODE ASME SECTION VIII, DIV 1
5. DEAERATE ALL LOADS FROM 3%TO 100% OF RATED OUTLET CAPACITY
6. ELIMINATE TITRATABLE FREE CARBON DIOXIDE TO 0.
7. CORROSION ALLOWANCE 1/16".
8. SUPERIOR BOILER WORKS, INC. RESERVES THE RIGHT TO FURNISH TRIM SHOWN OR AN EQUAL SUBSTITUTE AS DETERMINED BY SBW.

THIS DRAWING IS THE PROPERTY OF SUPERIOR BOILER WORKS AND SHALL NOT BE REPRODUCED IN PART OR IN WHOLE, AND NONE OF ITS INFORMATION SHALL BE REVEALED WITHOUT PERMISSION OR TO THE DETRIMENT OF THE OWNER, IT MUST BE RETURNED UPON REQUEST.

SOLD TO: X

JOB: X

DRAWN BY:	DATE	CHECKED BY:	DATE
D. RIDDER			

DRAWING NAME: DEAERATOR, SPRAY

MODEL NO: SSD070T155-125

SIZE: 1,450 GALLONS

SUPERIOR BOILER WORKS, INC.
HUTCHINSON, KANSAS

SCALE: 1/60

DRAWING No: 15070XXX